Slim Exposed Fan Coil Unit

Manual

Please read this manual carefully before use.
Actual product color or pattern shall prevail.
Our company reserves the final right of interpretation for this manual.

CONTENTS

Safety Precautions 01

Product Introduction 04

Product Installation Instructions 08

Electrical Wiring 10

Product Operating Instructions 11

Maintenance and Care 20

Warranty Instructions 21

Safety Precautions

Dear User,
To ensure personal safety and normal operation of the equipment, please carefully read and strictly observe the following safety warnings before installation, commissioning, use, and maintenance of this product.

⚠ Danger

- Do not allow non-professional personnel to carry out water pipe connection, wiring connection, or other installation work without reading the installation manual. Failure to comply may result in system leakage, electrical faults, or fire.
- Installation and repair qualification requirements: Installation, commissioning, repair, and maintenance of this product must be performed by qualified professionals. Unauthorized operation by non-professionals may lead to serious safety accidents such as electric shock, fire, or mechanical injury.
- Do not open the service cover of the unit with connecting the main power supply. Failure to do so may result in serious safety accidents.
- Do not touch or modify the safety devices of the indoor or outdoor unit without authorization. Doing so may create a risk of serious accidents.
- During unit operation, do not insert hands, tools, or other objects into the fan, air outlet, or air inlet.
- The unit must be reliably grounded. The grounding resistance shall comply with relevant national standards. The power socket must have a reliable grounding protection. Do not use a socket without grounding protection.
- Do not touch any electrical components with your hands. Risk of electric shock may occur.
- In the event of a fire, cut off the power supply immediately.

⚠ Warning

- Do not use aerosols such as insecticides, paints, hair sprays, or other flammable gases within 1 meter of the unit.
- Do not install the unit in an environment containing flammable or explosive gases, steam, or dust.
- Maintain good ventilation around the unit. Do not stackdebris that may affect heat dissipation or maintenance access.
- Ensure the grounding wire is firmly connected. Improper grounding of the unit may result in electrical faults.
- When routing piping or wiring through knock-out holes, take protective measures to prevent cuts or damage.
- Securely fasten all connecting wires. External force on terminal connections may cause loose terminals, leading to fire.
- Ensure the air conditioner is installed with sufficient structural strength. Otherwise, the unit may fall or tip over, causing equipment damage or personal injury.
- Perform electrical work in accordance with the installation instructions and all applicable regulations and standards. Failure to do so may cause electrical faults or fire due to insufficient capacity or improper specifications.
- Use the specified wiring and select the correct wire type. Otherwise, electrical faults or fire may occur.
- The pressure test pressure shall not exceed the maximum working pressure of the unit, which is 1.6 MPa.
- When the ambient temperature is below 0° C in winter, drain all water from the piping and coils to prevent freeze damage.
- Avoid installing the unit in damp locations, areas with corrosive gases, or places exposed to prolonged direct sunlight.
- Clean the air filter regularly.

❗ Caution

- Do not step on the unit or place debris on it.
- Do not place any additional materials on or inside the unit.
- Keep a distance of more than 3 meters from strong electromagnetic radiation sources (e.g., medical equipment) to the indoor unit, outdoor unit, remote controller, and cables.
- The air inlet and outlet must not be obstructed. Obstruction may affect unit performance and cause unit overload.
- The drain pipe shall be installed correctly according to these instructions to ensure smooth drainage. Thermal insulation shall also be applied to prevent condensation. Improper pipe installation may cause water leakage and damage to indoor property.
- Electrical work must be performed by qualified electrical personnel in accordance with the installation instructions. Insufficient power supply capacity or improper installation may cause fire or other accidents.
- The power socket must be equipped with a ground wire to ensure effective grounding of the air conditioner via the socket. No grounding or incomplete grounding may result in risk of electric shock.
- If abnormal sounds, odors, or vibrations are detected during unit operation, stop the unit immediately and contact qualified personnel for inspection.
- After completing the installation work, perform a trial run to confirm normal operation, then explain the usage and maintenance methods to the customer in accordance with the user manual and these instructions. Additionally, provide the manual to the user for proper safekeeping.

❗ Pre-delivery Inspection

- Upon receiving the unit, inspect it for shipping damage. If surface or internal damage is found, report it to the transportation company immediately.
- Check the product model, electrical parameters (power supply, voltage, frequency), and accessories to verify compliance with requirements. The standard application of the unit is described in this manual. In case of problems, contact your local dealer.
- The company assumes no responsibility for any changes made to the unit without written consent.

Product Outline Drawing (Line Art)

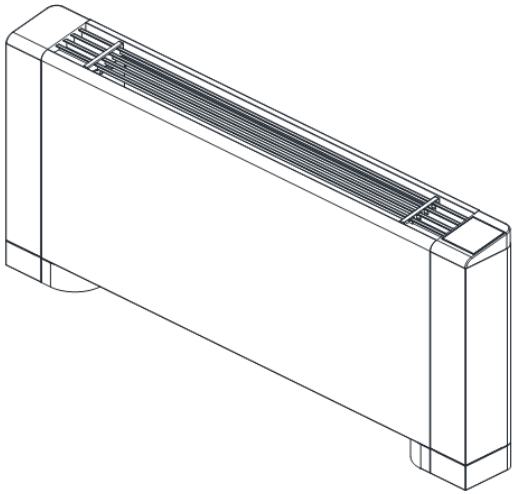

Exploded View Drawing and Part Name

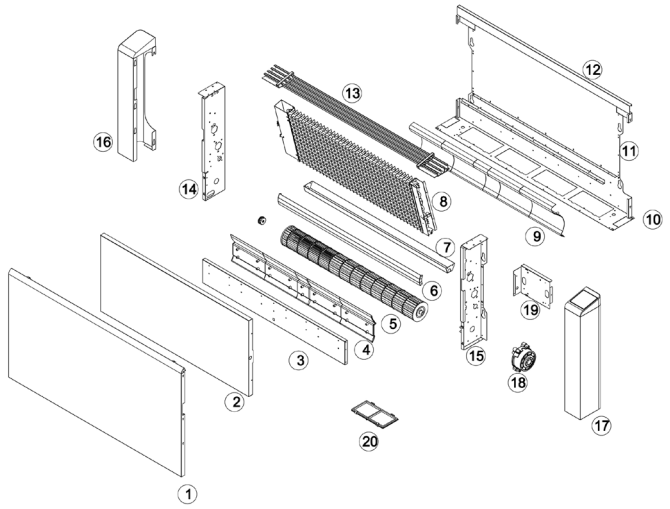

No.	Name
1	Front panel
2	Horizontal condensate tray
3	Front volute bracket
4	Front volute
5	Fan
6	Air deflector
7	Vertical condensate tray
8	Coil
9	Rear volute
10	Lower back panel
11	Upper back panel
12	Rear handle
13	Air outlet
14	Left side panel
15	Right side panel
16	Left side shell
17	Right side shell
18	Motor
19	Junction box
20	Filter

Operating Conditions and Instructions

This fan coil unit is designed for normal air conditioning use only. Do not use it for other purposes such as drying clothes, freezing food, cooling or heating other items. Do not install the unit in the following locations. Failure to comply may result in fire, deformation, or malfunction of the unit.

- Locations with oil splashes (including engine oil)
- Locations where flammable gases are present
- Locations containing Sulfide gas or silicone substances (e.g., hot springs)
- Coastal areas with high saline-alkali, strong acid, or strong alkali conditions, which may corrode the unit

This fan coil unit is designed to operate within the following temperature ranges. Please use the unit within these ranges.

- The chilled water inlet temperature should not be lower than 5° C, otherwise condensation on the unit may occur. The hot water inlet temperature should not exceed 80° C (55° C is typical), otherwise corrosion of the copper tubes in the heat exchanger may occur.
- The recommended ambient operating temperatures for the unit are: cooling mode: 16~36° C; heating mode: 10~30° C; relative air humidity ≤ 90% RH. Operating outside these ranges will affect the performance of the unit.

Product Dimensional Drawing and Dimension Table

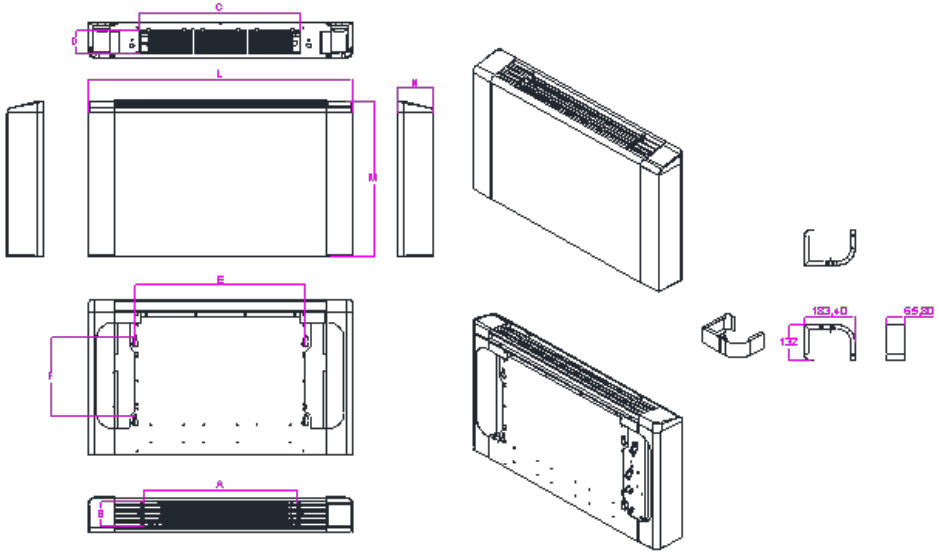

Slim Exposed Fan Coil Unit

Model	EV-10FSL	EV-20FSL	EV-30FSL
Air outlet length A	360	550	820
Air outlet width B	89	89	89
Air inlet length C	386.4	576.4	846.4
Air inlet width D	89	89	89
Mounting hole length E	420.4	610.4	880.4
Mounting hole width F	294	294	294
L × M × N	757 × 579 × 132	947 × 579 × 132	1217 × 579 × 132

Product Installation Instructions

- **Installation Precautions**

1.Installation and service work must comply with local standards, laws, and regulations.

2.Installation of this fan coil unit must be carried out by a dealer or qualified professional. If the user installs the unit themselves, water leakage, electric shock, or fire may occur.

3.Do not carry out installation work such as water pipe connection, drain pipe connection, or electrical wiring without reading the installation manual.

4.Check that the ground wire is correctly and securely connected.

5.Before installation and commissioning, do not place any unrelated materials inside the indoor unit. Ensure the fan coil unit is free of debris. Failure to do so may result in fire or accident.

6.Do not install the fan coil unit in a flammable environment. Keep it away from fire sources and explosives.

7.Do not install the fan coil unit outdoors. Otherwise, electric shock or leakage may occur.

- **Installation Environment Requirements**

Installation Space

1.Install the fan coil unit in a location that allows easy access for operation and maintenance.

2.When conne1cting the water inlet and outlet pipes, to prevent vibration caused by unit operation, it is recommended to use flexible connections and seal the threads with PTFE tape (plumber's tape). When tightening the connections, hold a wrench firmly against the unit's water inlet/outlet port and tighten slowly and evenly. The torque should not exceed 70 N·m (7.1 kgf·m). When using tools with a long lever arm, exercise special care to avoid excessive torque, which may deform the copper pipe or cause twisting and leakage.

Vertical Installation detail drawing

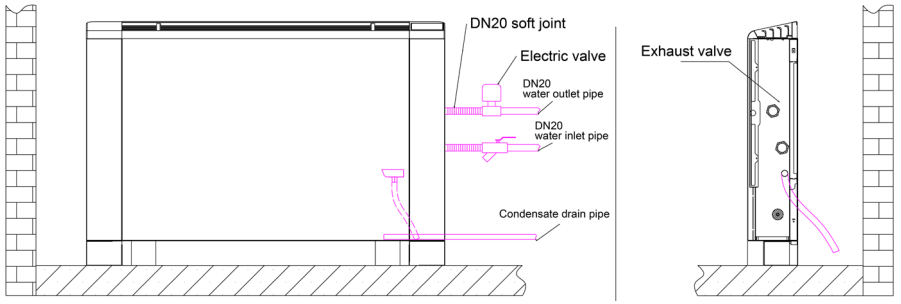

Horizontal installation detail drawing

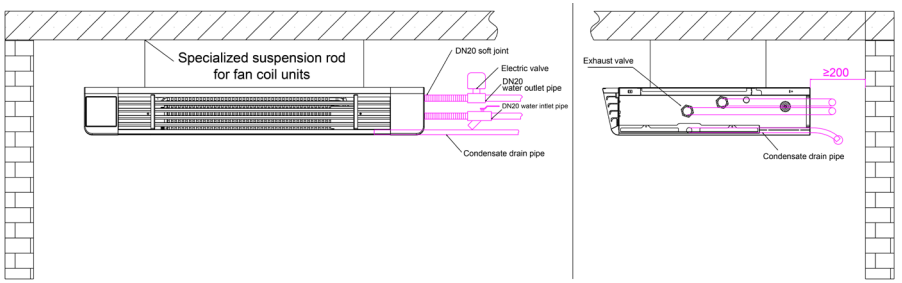

Notice

- The indoor unit must be installed in a suitable location to ensure even temperature distribution throughout the room.
- The air inlet and outlet of the indoor unit must not be obstructed by any objects that may block airflow.
- Do not install the indoor unit in equipment rooms or kitchens where oil vapor or cooking fumes may enter the unit.
- If oil accumulates on the heat exchanger, it will reduce the performance of the indoor unit and may damage its plastic components.
- When installing the fan coil unit in a hospital or near other medical equipment that generates electromagnetic waves, pay attention to the following:

  1.Install the fan coil unit as far away from the electromagnetic radiation source as possible, and no less than 3 meters.

  2.If the power supply contains electrical noise, install a filter to eliminate the noise.

- Acids and alkalis are corrosive to the heat exchanger. Do not install the fan coil unit in an environment containing acids or alkalis.

Electrical Wiring Diagram

Wiring Precautions

- Before performing electrical wiring or periodic inspections, turn off the main power switches of the indoor and outdoor units and wait at least 10 minutes.
- Before performing electrical wiring work or periodic inspections, verify that the unit fan have stopped completely.
- Protect wires, drain pipes, electrical components, and other parts from rats and other small animals. Failure to do so may result in rodents damaging the components, which could cause a fire.
- Prevent wires from coming into contact with piping, sheet metal edges, or electrical components inside the unit. Otherwise, the wires may be damaged or may even cause a fire.
- Use an Earth Leakage Breaker (ELB) with a medium or higher speed response (operating time 0.1 seconds or less). Failure to do so may result in electric shock or fire. All wiring must be securely fastened. External force on the terminal connections may cause a fire.
- Do not use the fan coil unit's power terminal block to extend power wires. For expanding the power wiring at the fan coil unit side, a separate power distribution terminal box may be used. Ensure proper calculation of the wiring capacity; insufficient wiring capacity may cause a fire.
- Do not start the system until all inspection items have been checked.
- For detailed information, refer to the "Electrical Wiring Diagram" attached to the surface of the electrical box.

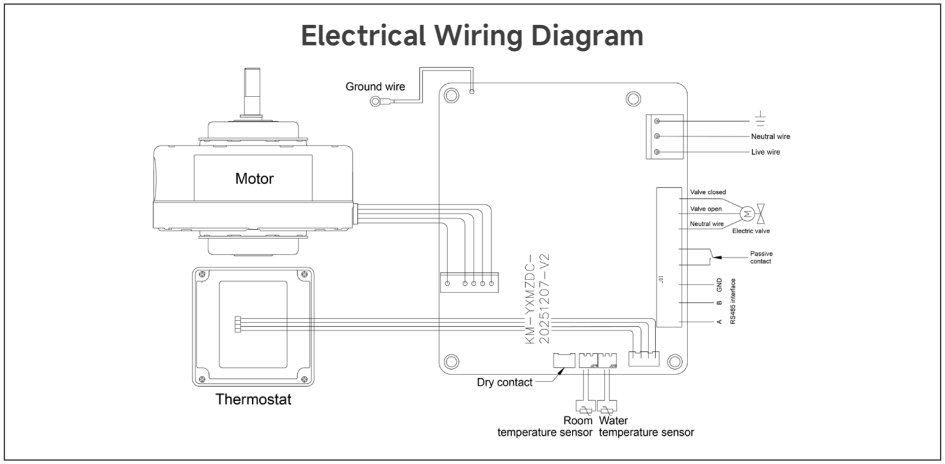

Product Operating Instructions

Operating Precautions

- **Safety Instructions**

  1.Do not allow water to enter the fan coil unit. These units contain electrical components, and exposure to water may cause a short circuit.

  2.Do not open the casing of the fan coil unit, or approach the fan coil unit enclosure, before turning off the main power supply.

- **Preparation Before Operation**

  1.Before trial operation, carefully verify that all previous installation work (electrical connections, pipe connections, pipe insulation, etc.) has been fully completed and is secure.

  2.Check the water system: ensure the supply and return water valves are fully open, there are no leaks in the piping, all air inside the coil has been purged, and the condensate drain is clear.

  3.Check the air system: ensure the fan impeller moves freely without obstruction or foreign objects, the return air filter is clean, and the supply/return air openings are not blocked.

- **Warning**

  1.Do not use any flammable aerosol products such as insecticides, paints, or hair sprays within approximately 1 meter of the unit.

  2.If the indoor distribution panel or fuse is frequently tripped or blown, stop using the air conditioning system and contact the company's authorized dealer.

Product Feature Description

- **Feet Mounting**

The vertical exposed model comes standard with one set of feet, which must be assembled by the user. To install, align the bracket holes with the fixing posts on the unit body, snap them into place, and the installation is complete.

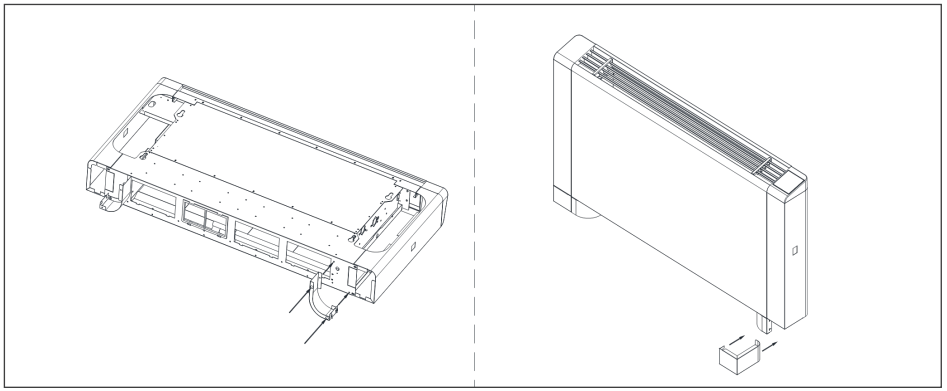

- **Removable Cover**

The removable cover design enables flexible operation during installation, making it easy to route and connect piping. Once the unit is in service, it also allows convenient access for internal inspection, dust removal, and other maintenance, improving ease of use.

- **Removal steps**

First, loosen the bottom screws, then pull upwards to remove the side cover.

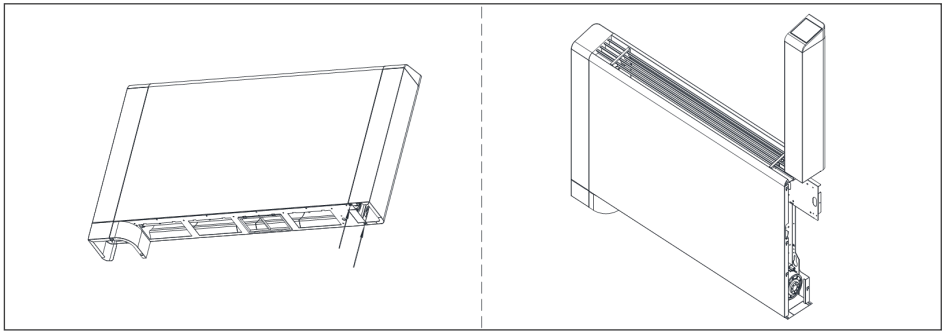

Thermostat Operating Instructions

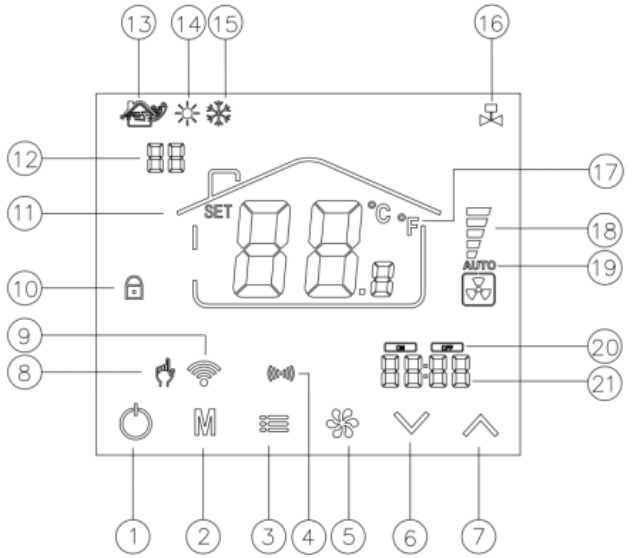

- **The key definitions**

NO.	Description
1	Power
2	Mode
3	Timer
4	Communication icon
5	Fan speed,long press lock the display
6	Down
7	Up
8	Manual mode icon
9	WIFI icon
10	Lock icon

11	Temperature display zone
12	Fault code display zone
13	Fan mode icon
14	Heat mode icon
15	Cold mode icon
16	Valve open icon
17	Celsius/Fahrenheit
18	Fan speed display zone,more cell faster speed
19	Auto icon
20	Timed power on/off icon
21	Time display zone

Product Operating Instructions

- **Key Description:**
- **Power button:** Short press the power button to turn the instrument on and off when the power is on.
- **Mode key:** Short press the M key to switch working modes, which are divided into ventilation mode, cooling mode and heating mode. Press and hold the M key to enter Beijing time setting.
- **Timing key:** Press and hold to activate the timer power on and off function when the phone is turned on, short press to set the timer to power on and off.
- **Down key:** adjust the set temperature, when setting, it is minus.
- **Up key:** adjust the set temperature, when setting, it is plus.
- **Fan speed key:** Short press to adjust the wind speed and automatically control the wind speed status. Long press the wind speed key to lock or unlock the keyboard.
- **Timer power on/off**: Press and hold the timer button after powering on to start the timer power on/off function until the icon OFF is always on, then short press the button to enter the timer on/off time setting. At this time, the icon OFF is always on and the hour position flashes. Press the up/down button to adjust. press the button again and the minute position will flash. Press the up/down button to adjust. Press the timer button again. The icon ON will always be on. The hour position will flash. Press the up/down button to adjust. Press the timer button again. The minute position will flash. Press the up/down keys to adjust, then press the timer key to save and exit/it will automatically save and exit if no operation is performed for 5 seconds.
- **Set time:** When the device is powered on, long press the M key, the time hour position flashes, press the up/down keys to correct, short press the M key again to switch to the time minute setting, press the up/ down keys to correct. Press the M key again to save and exit/it will automatically save and exit if no operation for 5 seconds.
- **Reset:** When the device is powered on, press and hold the power button + fan speed button at the same time to restore factory settings.

- **Set time:** When the device is powered on, long press the M key, the time hour position flashes, press the up/down keys to correct, short press the M key again to switch to the time minute setting, press the up/ down keys to correct. Press the M key again to save and exit/it will automatically save and exit if no operation for 5 seconds.
- **Reset:** When the device is powered on, press and hold the power button + fan speed button at the same time to restore factory settings.

Product Operating Instructions

- **APP WIFI connection:** When the device is powered on, press and hold the power button + up button at the same time to connect the APP distribution network. When the icon flashes quickly (the icon flashes twice in 1 second), you can open the mobile APP and enter the router account and password to connect. The icon will always light up after the connection is successful.
- **Fan speed setting:** When the device is powered on, long press the wind speed key + the down key to set the output speed of each gear, short press the wind speed key to switch to the next gear, press the up and down keys to adjust the data, a total of 5 speed levels are adjustable, short press the power button after the setting is completed to exist.
- **Check the coil temperature:** press and hold the up button when the power is turned on.
- **Anti-cold wind function:** 1. If the coil temperature sensor not connected, the anti-cold wind function will not be activated. 2. If the anti-cold wind temperature is set to "0", the anti-cold wind function will not be activated regardless of whether the coil temperature sensor is connected or not. When the anti-cold wind temperature is not set to 0, the coil temperature sensor is connected. When the coil temperature is lower than the set anti-cold wind temperature, the fan has no output in the heating mode and the heating icon flashes. When the coil temperature is higher than the set anti-cold wind temperature, the fan work and the heating icon does not flash.
- **Key Description:**

Room temperature sensor failure	E1
Coil temperature sensor failure (only displayed on the coil temperature viewing interface)	E2
Communication failure	E3
Fan failure	E4

- **In the shutdown state, press and hold the M key to start the standard parameter setting items. (As following form)**

NO.	Function	Data	Function	Default	Note
1F	485 communication address	0-99		1	
2F	Temperature sensor location selection	0-1		0	Selection is not supported
3F	Set max temperature	Minimum value -55		35℃ (95 ℉)	
4F	Set min temperature	0-max value		15℃ (59 ℉)	
5F	Temperature Calibration	+-9 degree	+for up -for down	0 (32 ℉)	
6F	Temperature control differential	1-5		1 (33 ℉)	
7F	anti-cold wind temperature	0-50		28 (82 ℉)	
8F	Anti-freeze	0-1	0 close 1 open	0	After turning on anti-freeze, when the unit turned off, the Temp. ≤ 4 ℃ it starts and stops when the Temp. ≥ 7℃
9F	No function				
10F	Standby backlight brightness	0-100	0 close 100 total bright	20	
11F	Screen off selection	0-1	0 Keep the screen on 1: after 30s screen off	0	

- **Anti-heat air logic:**

1. If no pipe temperature is connected, the anti-heat air function will not be activated.

2. If the anti-heat air temperature is set to 0, the anti-heat air function will not be activated regardless of whether a pipe temperature is connected. When the anti-heat air temperature is not set to 0, and the coil temperature sensor is connected, the anti-heat air function will activate if the temperature is less than or equal to the set temperature (default temperature does not have a decimal point), and the cooling icon will not flash. If the temperature exceeds the set temperature by 3 degrees, the fan will stop, and the cooling icon will flash. Using the anti-heat/cool air function requires the valve and fan to be closed at the set temperature!

After shutting down, long press the power button + up button to start the function setting.

NO.	Function	Data	Function	Default	Note
1E	Show EE reminder				
2E	Time function selection	0-1	0 No time function 1 Timing	1	
3E	Fan off selection	0-2	0 When the set temperature is reached, the fan is turned off and the valve is closed at the same time. 1. When the set temperature is reached, the fan will not be turned off for cooling and only the valve will be turned off. The fan will be turned off for heating and the valve will be turned off. 2. When the set temperature is reached, the fan will not be turned off, only the valve will be closed.	0	
4E	Powered on, on/off selection	0-2	0 Memorize the power on and off status before power outage 1 Power on and start up 2 Power on and shut down	0	
5E	Switch ℃ / ℉	0-1	0 show ℃ , 1 show ℉	0	

Remote control

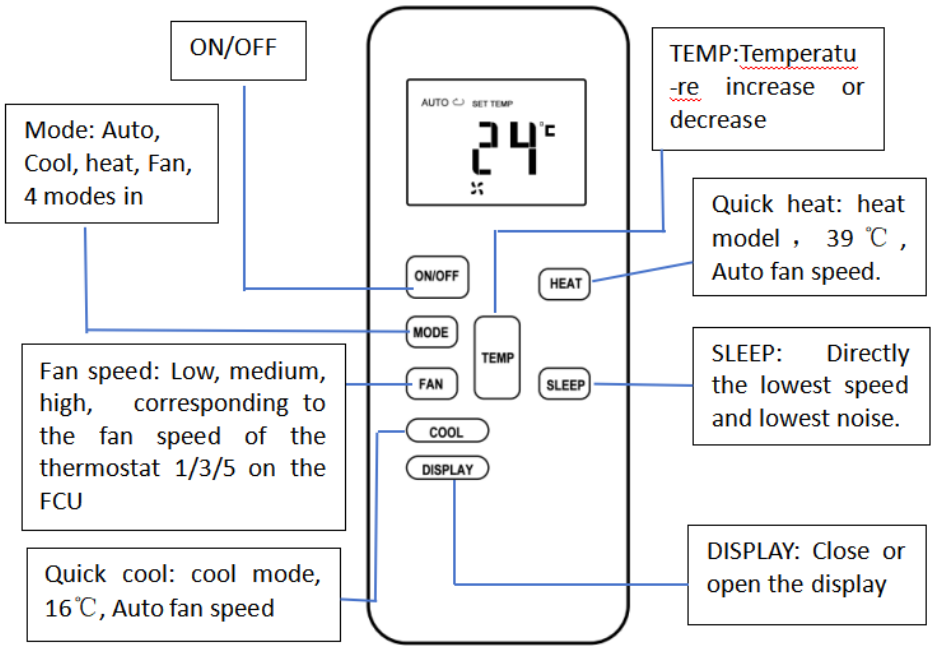

Common Faults and Solutions

Symptom	Possible Cause	Solution
Abnormal noise or vibration from unit	Motor bearing damaged	Replace motor
	Fan motor fixing screw loose	Tighten screw
	Volute or fan damaged	Replace volute or fan
	Foreign object in air duct or outlet	Remove foreign object
	Air filter is clogged	Clean the filter
Poor air output or reduced airflow	Air inlet or air outlet of the unit is blocked by an obstruction	Remove the obstruction
	Air filter is clogged	Clean the filter
Insufficient cooling/ heating	Unit electric valve not opened	Start unit electric valve
	Circulating pump not running, water not flowing	Start circulating pump
	Heat exchanger fins blocked or bent	Clean and straighten fins
	Unit chilled water set temperature too high / hot water set temperature too low	Adjust set temperature on outdoor unit/chiller/boiler
	Inappropriate mode or temperature setting on the thermostat	Readjust the mode or temperature setting on the thermostat
	Air filter is clogged	Clean the filter
Water leakage	Drain pan outlet blocked	Clear blockage
	Insulation on pipes/fittings insufficient	Insulate properly
	Unit not level	Level the unit
	Unit stopped while chilled water flowing	Turn off unit's electric valve or set unit to low speed
	High ambient humidity	Reduce humidity and prevent high humidity air entering room
	Air vent valve loose	Tighten valve
	Unit piping leaking	Repair or contact the dealer

Maintenance and Care

Regular maintenance and care can effectively extend the unit's service life and ensure air quality.

- **Safety Requirements**

1.Before performing maintenance or care, disconnect the unit's power supply and close the water circuit valves. Do not work on the unit while it is powered or pressurized.

2.Use a neutral detergent for cleaning. Do not use strong acids, strong alkalis, or corrosive solvents to avoid damaging the fins, plastic parts, and electrical components.

3.During cleaning, protect the motor and electrical control box from water ingress. Do not allow water to enter these components to prevent short circuits, electric shock, and equipment damage.

4.After completing maintenance, first check that there are no leaks, debris, or loose parts, then restore power and water supply for a trial run. Only put the unit into normal operation after confirming it is functioning properly.

- **Maintenance and Care Methods**

1.Air Filter Cleaning: It is recommended to clean the return air filter every 2–3 months of use. Excessive dust accumulation will seriously affect airflow and heat exchange performance. Clean the filter with clean water. After cleaning, leave it to dry in a cool, shaded place. Do not expose it to direct sunlight or dry it with an open flame.

2.Coil Fin Cleaning: It is recommended every 1–2 years to evenly spray a neutral coil cleaner onto the fins, allow it to sit to dissolve dirt, then rinse with low-pressure clean water or compressed air in the direction of the fins. Do not use high-pressure water or rinse in the reverse direction, as this may cause fin collapse or damage to the copper tubes.

3.Condensate Drain Pan Cleaning: Periodically check the drain pan for sludge or debris. Keep the drain clear to prevent bacterial growth and water overflow. Rinse with clean water. If necessary, use a diluted disinfectant solution to remove bacteria and odors.

4.Fan Maintenance: It is recommended every 1–2 years to use a soft brush and vacuum cleaner to remove dust and debris from the impeller and the inside of the scroll casing. Check the impeller for deformation. If abnormal noise or reduced airflow occurs, inspect and resolve the cause promptly.

5.Seasonal Maintenance:

Summer shutdown period: It is recommended to keep the coil filled with water to reduce internal corrosion of the pipes.

Winter shutdown period (especially in cold northern regions): All water inside the coil and piping must be completely drained and purged with compressed air, or reliable freeze protection measures must be taken. Do not allow water to freeze inside the unit, as this may crack the copper tubes.

Warranty Instructions

Warranty Service Details

Dear User

1.When requesting warranty service, please present the warranty card and the purchase invoice with all relevant information fully completed. The company provides a 36-month warranty from the date of product purchase. During the warranty period, for quality issues arising under normal use, the company will provide free repair or replacement services. For damage caused by human factors or for service beyond the warranty period, the company will charge a reasonable fee for repair or replacement services.

2.Damage caused by human factors includes, but is not limited to: damage resulting from improper use or operation; abnormal wear and tear, dropping, crushing, deformation, ingress of foreign objects, or exposure to moisture; alteration or tearing of the product's security seals; or any other visible damage caused by human factors.

Other excluded conditions include:
- Damage caused by unauthorized disassembly, modification, improper handling, incorrect operation, or water ingress by the user.
- Damage caused by force majeure, such as earthquake, flood, fire, typhoon, or war.
- Cases where the purchase invoice does not match the product model number, or where the warranty period has expired.

Disclaimer

The following cases are not covered under warranty. In these cases, the company will provide paid repair and maintenance services.

- Products not sold by the company or its authorized distributors.
- Damage caused by poor user power supply, or by improper use, storage, transportation, or maintenance by the user.
- Products beyond the warranty period, or where the warranty certificate model does not match the product being repaired, or the certificate has been altered.
- Damage caused by installation or repair performed by service providers not authorized by the company.
- Damage caused by disassembling or repairing the product without authorization.
- Counterfeit products or non-genuine products.
- Losses caused by force majeure.
- Warranty services not specifically promised by the company.
- For water-related products: when the ambient temperature is below freezing, ensure the unit remains powered on. If the unit will not be used for an extended period, completely drain all water from the water system to prevent freezing and damage to the unit.

The company shall not be held responsible for any damage to the company's equipment or to other customer equipment resulting from failure to comply with the above requirements.